N Male Right Angle connector for 1/2" coaxial cable

Mechanical Specifications (Unit:mm)

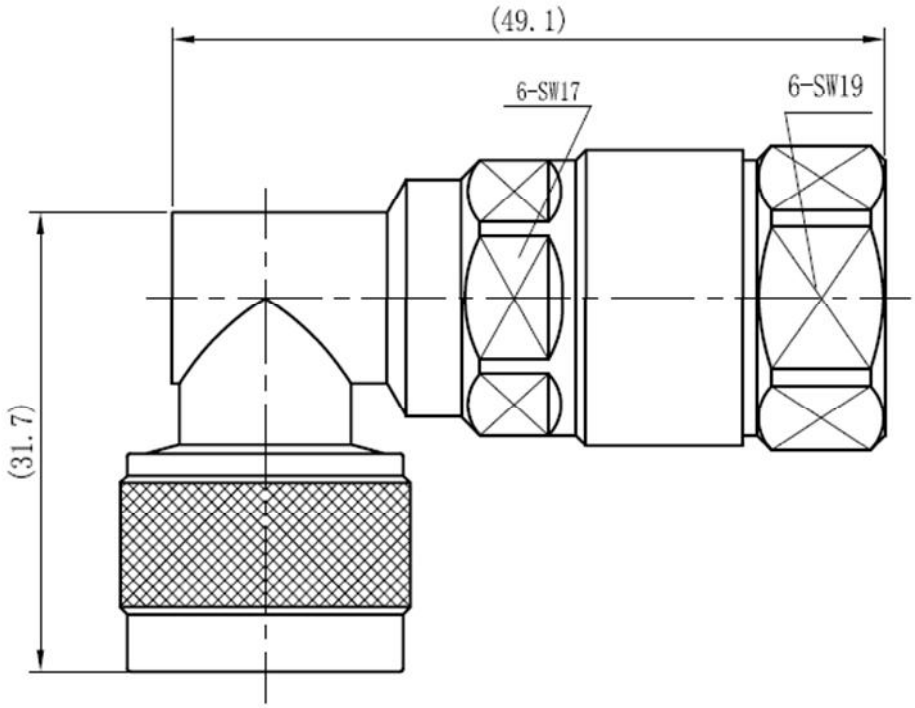

Specifications

Interface	IEC 60169-16	
Connection cable	1/2” cable	
Electrical		
Characteristic Impedance	50Ω	
Frequency Range	0-3GHz	
VSWR	0.8 ~ 2.5GHz ≤1.12; 2.5 ~ 3GHz ≤1.15	
IL	≤0.05 dB	
Peak power, maximum	≥0.7kW	
Passive intermodulation	≤-159dBc (2x43dBm carrier)	
Dielectric Withstanding Voltage	≥2000V RMS ,AC, 1Min	
Contact resistance	outer contact ≤ 1.0mΩ	
	centre contact ≤ 0.25mΩ	
Dielectric Resistance	≥5000MΩ	
Return loss		
DC – 1GHz	≥34	
1GHz-3Ghz	≥26	
Mechanical		
Durability	Mating cycles ≥500	
Material and plating		
Part	Material	Plating
Body	Brass	Tri-Alloy ≥ 3μm
Center conductor	Brass/phosphor bronze	Ag ≥ 3μm
Insulator	PTFE/TPX	
Sealing ring	Silicone rubber	
Other Metal parts	Brass	Ni ≥ 2.5μm
Environmental		
Salt spray	Meet 48 Hours (5% Salt Concentration)	
Temperature Range	-40°C ~ +85°C	
Relative Humidity	0 ~ 95%	
Watertightness	IP68	
ROHS	Comply full	
Weight	130gram	

Ordering Information

Product Name	Product Description
A-N-JWA(1/2)-7	N Male Right Angle connector for 1/2" coaxial cable

Contact Information

Ascent Communication Technology Ltd

AUSTRALIA
961 Mountain Highway, Boronia
Victoria 3155, AUSTRALIA
Phone: +61-488 293 682

CHINA
Unit 1907, 600 Luban Road
200023, Shanghai CHINA
Phone: +86-21-60232616

EUROPE
Pfarrer-Bensheimer-Strasse 7a
55129 Mainz, GERMANY
Phone: +49 (0) 6136 926 3246

HONG KONG SAR
Unit 9, 12th Floor, Wing Tuck Commercial Centre
177 Wing Lok Street, Sheung Wan, HONG KONG
Phone: +852-2851 4722

USA
2710 Thomes Ave
Cheyenne, WY 82001, USA
Phone: +1-203 816 5188

VIETNAM
15 /F TTC Building, Duy Tan Street
Cau Giay Dist., Hanoi, VIETNAM
Phone: +84 168 481 8348

WEB: www.ascentcomtec.com

EMAIL: sales@ascentcomtec.com

Specifications and product availability are subject to change without notice.
Copyright © 2017 Ascent Communication Technology Limited. All rights reserved.
Ver. A-N-JWA(1/2)-7 datasheet